EXTREME PRECISION FOR OPTIMAL PERFORMANCE

THIELENHAUS

MICROFINISH

About us

Ernst Thielenhaus machine factory was founded in 1909 and today belongs to Thielenhaus Technologies GmbH as the division Thielenhaus Microfinish. The company has developed over the course of several decades into the most important global player within surface precision machining.

Microfinish has been the technological benchmark in surface precision machining for decades, given that it has experienced significant advances in terms of efficiency, functional reliability, noise minimisation and miniaturisation.

The high-tech process is used in all areas where the highest degrees of precision and durability, the lowest levels of friction and operational noise, long service lives and material efficiency are required.


THIELENHAUS
TECHNOLOGIES

What is Microfinish?

- The terms 'finish', 'Superfinish' and 'Microfinish' refer to a **high-precision process for improving workpiece surfaces and geometry**.
- Rotation of the workpiece, combined with oscillation of the finishing tool, produces optimal workpiece surfaces and geometry.

Microfinish:
Benefits at a glance

- Noise reduction
- Reduced energy consumption
- Extended service life
- Less wear
- Higher load-bearing capacity
- Reduced friction

Enhanced surface qualities:

- Roundness
- Roughness
- Waviness
- Straightness
- Cylindricity
- Parallelism

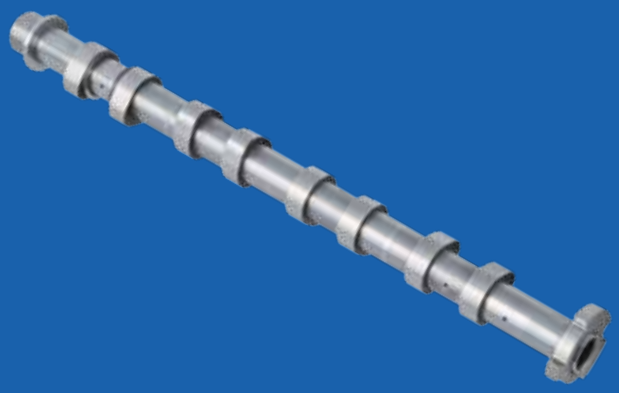

How Microfinish works (examples)

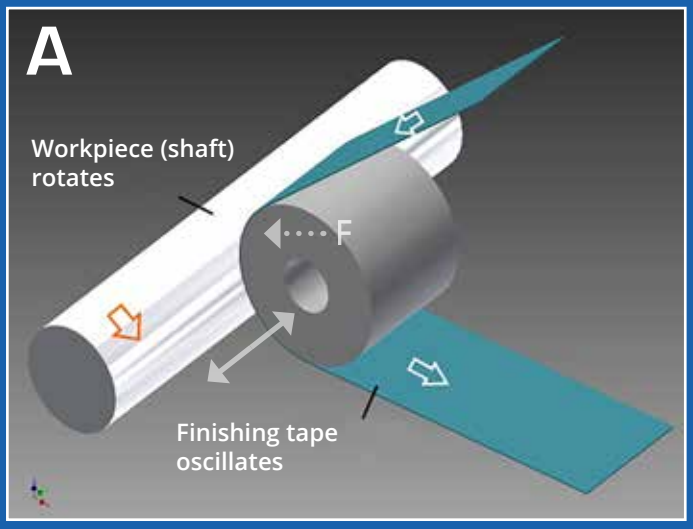

Tape finishing of shafts

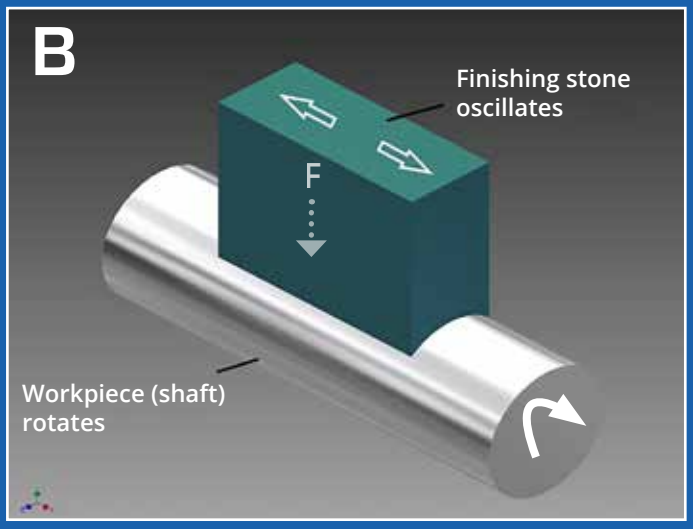

Throughfeed stone finishing of shafts

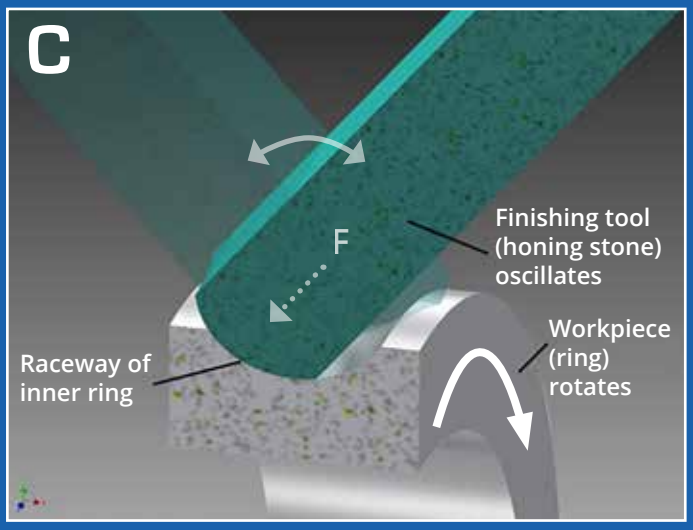

Finishing of ball and roller bearing raceways

When machining cylindrical workpieces – like journals on driveshafts – a Microfinish/Superfinish tool (stone or tape) is placed against the surface of the workpiece. The tool then oscillates while the workpiece rotates (fig. A/B/C).
Stone finishing is applied for roller bearings, roll barrels, piston pins and shock absorber rods. Tape is used mostly for machining crankshafts, drive shafts as well as steering racks.
For machining flat or spherical surfaces cup wheels are brought in contact with the workpiece by precision spindles.

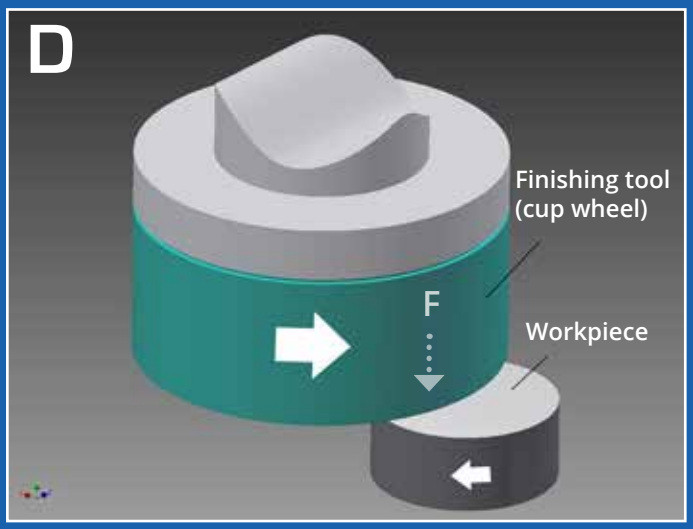

Finishing of flat surfaces

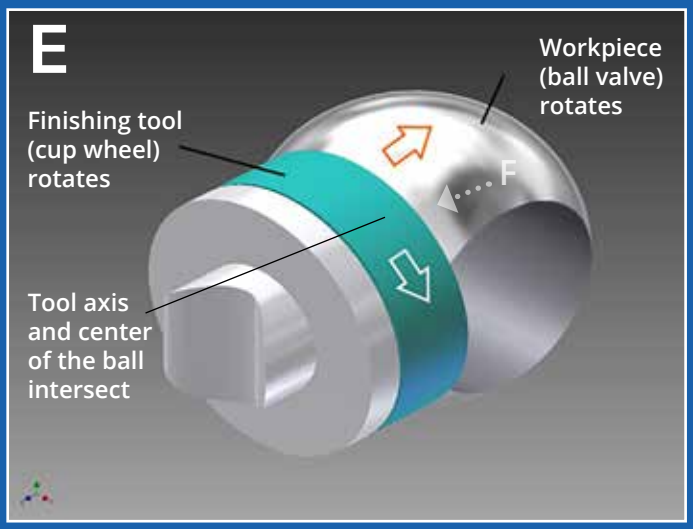

Finishing of spherical components

AUTOMOTIVE

Particularly in the automotive sector, superior precision and repeatability are preconditions for higher performance, reliability, durability and savings on energy and raw materials. Employing a Microfinish/Superfinish process, enables the engineer to define part surfaces and geometries to improve the function of any component.

Components produced:

- Crankshafts
- Camshafts
- Connecting rods
- Inlet and outlet valves
- Synchronous wheels
- Planetary gears
- Shock absorber rods
- Brake discs
- Rotor shafts
- Seal seats
- Balance shafts
- Cams and tappets
- Piston pins
- Universal joints
- Steering racks
- Shim rings
- Injectors
- Adapter plates
- Gear wheels and shafts including bearing seats

ROLLER BEARI

Microfinish/Superfinish processing significantly improves the roundness and roughness of roller bearing surfaces, enabling top quality.

Components produc

- Ball bearings
- Roller bearings
- Tapered roller bearings
- Cylindrical roller bearings
- Self-aligning bearings, etc., and their rolling elements

NGS

ed:

HYDRAULICS/PNEUMATICS

Valves with finished valve balls made from steel and other materials, such as ceramics, meet the most stringent requirements for safety and the environment.

Components produced:

- Valve balls
- Seal seats
- Pump pistons
- Pump gears
- Pump rotors
- Port heads
- Pump covers
- Spherical bearings

MEDICAL

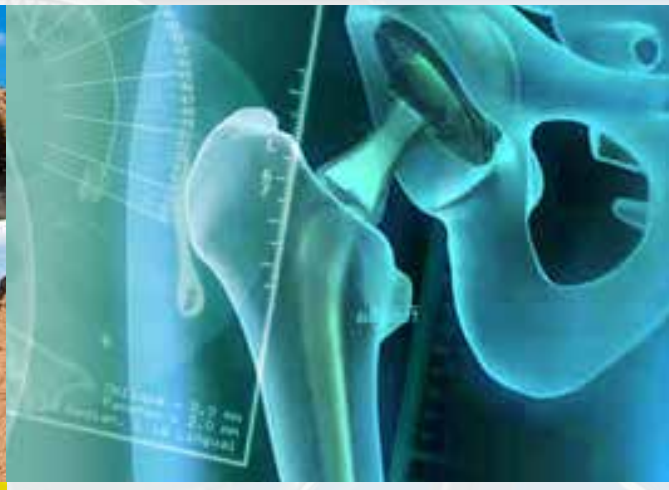

Our customers offer market-leading implants for the hip, knee, ankle, and shoulder.

Components produced:

- Endoprosthesis spherical
- Endoprosthesis spherical caps
- Flexible discs

CenterStar

Flexible processing of all shaft types

- Modular machine design – for maximum flexibility and accessibility with minimum space requirements
- Reduced costs per unit due to high processing capacity with short cycle times
- Able to integrate all manner of processes, such as stone, tape, CAB and flat finishing as well as brush deburring

CamStar

Camshaft finishing

- Multi-sided, fitted with two different tool holder units at each station for double output
- One or two stations for increased flexibility or output
- Faster and easier tool changes

	Example workpiece: Balance shaft	
	Before Microfinish	**After Microfinish**
Roughness	Rk 0.7 µm	Rk 0.16 µm
Rvk	0.5 µm	0.1 µm
Rpk	0.5 µm	0.03 µm
Roundness	< 3 µm	< 1.5 µm

	Example workpiece: Cams	
	Before Microfinish	**After Microfinish**
Lobes		
Roughness	Ra ≤ 0.45 µm	Rk < 0.6 µm
	–	Rvk < 0.6 µm
	–	Rpk < 0.35 µm
	–	Wt < 1 µm
Journals		
Roughness	Ra ≤ 0.9 µm	Ra < 0.2 µm

Machines

CrankStar

Crankshaft finishing

- Flexible machine solution in a compact design for small to large lot sizes
- Cost-effective and reliable processing of crankshaft mains, pins, seal diameter and thrust faces
- Optional: Loading/unloading during processing with external automation systems, independently of production time

Sphero

Precision-grinding and finishing of spherical surfaces

- Microfinish unit with MicroSens process control, and tool wear compensation
- Automatic tool changer with precision tool holder
- Compact, ergonomic design

Example workpiece: Crankshaft

	Before Microfinish	After Microfinish
Pins & mains		
Roughness	Rz ≤ 4 µm	Rz ≤ 1 µm
	Rk ≤ 2.1	Rk ≤ 0.18
	Rpk ≤ 0.29	Rpk ≤ 0.05
Thrust bearing		
Roughness	Rz ≤ 4 µm	Rz ≤ 1 µm

Improvement of the roundness up to 50% (depending on the waviness in circumferential direction)

Example workpiece: Ball & spherical cup

	Before Microfinish	After Microfinish
Roughness	–	0.02 µm Rz
Roundness	–	1 – 2 µm

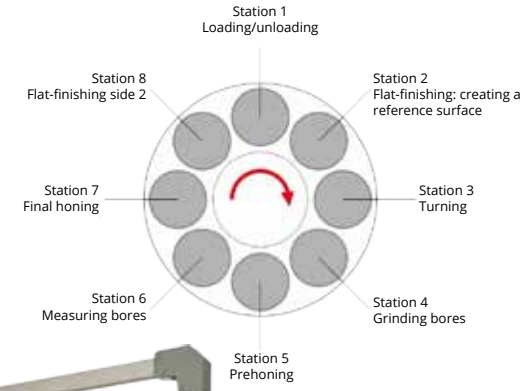

One-of-a-kind:
Combined processing finishing/grinding/honing

MicroStar FGH

Combined processing (finishing, grinding, honing)

- Lower overall investment due to integration of one or more processes with corresponding automation
- Lower space requirements due to process combinations at a diameter of only 1.5 m
- Extremely high workpiece quality in machine accuracy – free of defects caused by repeated clamp and unclamping

MicroStar EVO

Flat surface finishing

- Center column, rotary indexing table with up to 12 workpiece spindles
- Loading and unloading independent of production time due to concurrent processing on all stations
- Higher output due to extremely short cycle times

Example workpiece: Gear wheel

	Before Microfinish	After Microfinish
Surface	turned	Rz ≤ 1.5 µm
Flatness	–	2 µm
Radial and axial run-out	–	≤ 10 µm
Cylindricity	–	< 3 µm
Roundness	–	< 3 µm

Example workpiece: Injection nozzle

	Before Microfinish	After Microfinish
Roughness	turned	Rz ≤ 0.5 µm
Flatness	–	1 µm concave
Needle stroke tolerance	± 0.2 mm	± 0.005 mm
Edge rounding	–	≤ 0.05 mm

Machines

MicroStar 300

Flat surface finishing

- Designed for both small and large workpieces with a complex contour
- Up to 3 vertical arranged workpiece spindles
- Small machine footprint

NanoStar

Flat surface finishing

- Rotary indexing table with max. 4 workpiece spindles and 2 tool spindles
- Low space requirements
- Excellent accessibility for loading, unloading and maintenance

Example workpiece: Injector body

	Before Microfinish	After Microfinish
Roughness	turned	Rz ≤ 0.5 µm
Development of flatness	–	0.9 µm ± 0.3 µm concave
Bore depth	± 0.15 µm	± 0.025 µm
Edge rounding	turned	≤ 0.05 µm

Example workpiece: Planetary gear

	Before Microfinish	After Microfinish
Roughness	turned	Rz ≤ 1.6 µm
Flatness	–	≤ 0.02 mm

THIELENHAUS NISSEI V-5M

Double-sided surface grinding

- Cast-steel machine bed in closed box frame design for optimal damping and rigidity
- Able to use wheels ranging from conventional to diamond or CBN
- Swivel transport disc holder for optimal tool changing and access to the dresser

Infinity

Flow-through and plunge finishing

- Transport roller lengths of up to 1,100 mm with usable rollers diameters of up to 275 mm
- Lifting and lowering using pneumatic proportional valves, programmed part storage
- Faster tool changes and short retooling times as well as shared bearing housings for fast roller changes

Example workpiece: Piston ring

	Before Microfinish	After Microfinish
Roughness	–	Ra 1.6 µm
Thickness	± 0.6 mm	± 0.05 mm
Parallelism	–	0.02 mm
Flatness	–	0.01 mm

Example workpiece: Shock absorber rod

	Before Microfinish	After Microfinish
Roughness	Ra 0.12 – 0.20 µm	Ra ≤ 0.03 µm Rz ≤ 0.2 µm

Machines

THIELENHAUS MICROFINISH

CUBE evo

Finishing of shaft bearings and cams with maximum flexibility

- Self-preparation of the machine in combination with Industry 4.0
- Lot size 1
- Error-free and fast changeover times

PowerCUBE

Finishing of shaft parts at highest productivity

- Special space-saving Microfinish solution
- Innovative and user-friendly touchscreen software
- Up to six horizontally arranged workpiece spindles

Example workpiece: Pump wheel shaft

	Before Microfinish	After Microfinish
Roughness bearing	Rz 2.2 – 2.8 µm	Rz 0.4 – 0.6 µm
Roughness seal seat	Ra 0.6 µm	Ra 0.2 – 0.6 µm

Microfinish Machines

Outer diameter of roller bearing rings

BearingStar mini

05 – 19 mm

KM 90 evo

10 – 90 mm

BS 90

10 – 90 mm

BearingStar 120

60 – 120 mm

BearingStar 200

85 – 200 mm

BearingStar 320

180 – 320 mm

BearingStar 650

200 – 650 mm

BearingStar

Ball and roller bearing finishing

- Compact, high production bearing raceways Microfinishing machines for all product size ranges
- Short setup times due to menu-guided setup and workpiece visualisation on the HMI

Example workpiece: 4-point ball bearing

	Before Microfinish	**After Microfinish**
Roughness	Ra 0.3 – 0.4 µm	Ra ≤ 0.04 µm
Roundness	< 2 µm	< 1.5 µm

Thielenhaus MicroTool

We recommend using our MicroTools as distinguished by their consistency and near total lack of variation in quality from lot to lot.

- Finishing stones and cup wheels
- Contact shoe system for tape finishing units
- Finishing tape / finishing film
- Brushes for deburring processes

Prototyping & Contract Manufacturing

It is becoming increasingly common that components and workpieces have to satisfy complex geometric requirements and/or greater loads. In such cases, surface precision machining is generally applied. When it comes to start-up productions, prototype machining, our contract manufacturing service Thielenhaus Microfinish – the market-leading manufacturer of high-precision machine tools – is available to you.

- Shafts
- Balls and sockets
- Centerless
- Flat & special parts

Service

Thielenhaus Technologies takes the term 'customer service' seriously. We aim to maximise global availability of our machines. To ensure workpiece quality and availability, we offer you flexible support in training your production team, and our service team is always ready to help you with any new needs that may arise.

- Inspections
- Replacement parts
- 24/7 service hotline
- Training
- Modifications

The Power of Precision.

THIELENHAUS
TECHNOLOGIES

Thielenhaus Technologies GmbH
Schwesterstraße 50
42285 Wuppertal, Germany
+49 (0)2 02 - 4 81-0
+49 (0)2 02 - 45 04 45
germany@thielenhaus.com
www.thielenhaus.com

www.thielenhaus.com

Thielenhaus Technologies GmbH
Automotive Innovation
Am Bach 14 a
78098 Triberg, Germany
+49 (0) 175 - 4 35 13 57
germany@thielenhaus.com
www.thielenhaus.com

Thielenhaus Microfinish do Brasil
Rua Dona Francisca, 8300 -
Sala 7 – Unid. 15 – Bloco L
Condomínio Perini Business Park
CEP 89219-600 Joinville/SC, Brazil
+ 55 47 9994-6094
brazil@thielenhaus.com
www.thielenhaus.us

Thielenhaus Superfinish Innovation AG
St. Gallerstraße 52
9548 Matzingen, Switzerland
+41 (0) 52 376 26 20
+41 (0) 52 376 26 19
switzerland@thielenhaus.com
www.superfinish.ch

Thielenhaus Machinery (Shanghai) Co., Ltd
Jiangtian Dong Lu 212, building 7
Songjiang Industrial Zone
201613 Shanghai, P.R. China
+86 21 67 75 31 57
+86 21 33 52 87 67
china@thielenhaus.com
www.thielenhaus.cn

Thielenhaus Microfinish Corporation
42925 W. Nine Mile Road
Novi, MI 48375, U.S.A.
+1 2 48 3 49-94 50
+1 2 48 3 49-94 57
usa@thielenhaus.com
www.thielenhaus.us

Thielenhaus Microfinish INDIA PVT LTD
No. 38, Ground Floor
SRS Road, Peenya 1st Stage, Ward 38
Bengaluru 560058
Karnataka State, India
+91 90 21 91 86 85
+91 80 48 52 45 28
india@thielenhaus.in
www.thielenhaus.us

110
The Pioneer for Precision
THIELENHAUS
TECHNOLOGIES

Global Market Leader 2018

ATTITUDE BEST
NORDRHEIN-WESTFALEN

ISO 9001

0120_EN